UCFL2 Serie normale - *Standard duty*

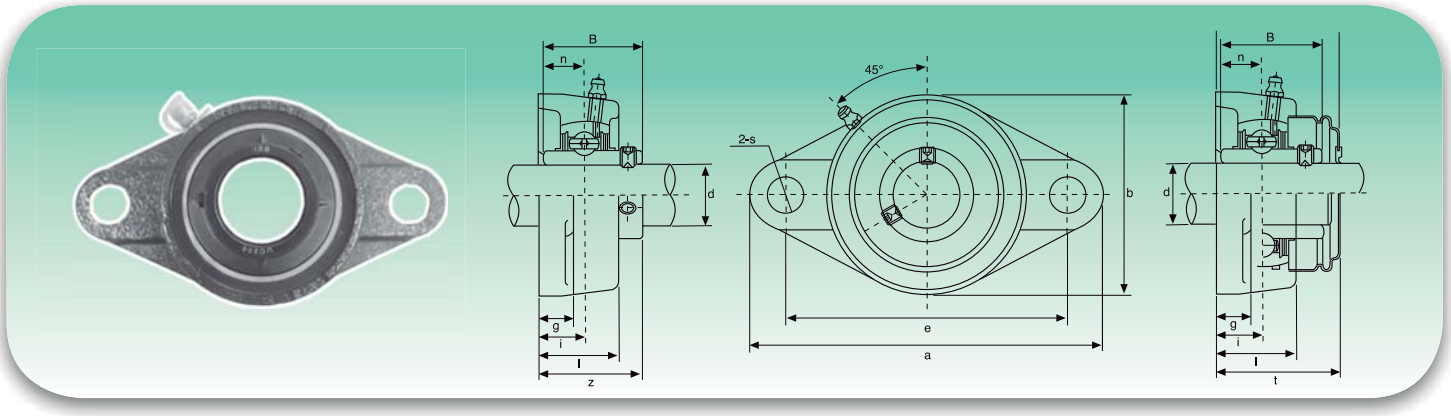

Tipo *Type*	Dimensioni - *Dimensions*												Bull. fiss. *Bolt Size*	Coefficienti di carico (N) *Load ratings (N)*		Cuscinetto *Bearing*	Supporto *Housing*	Peso *Weight*
	d	a	e	i	g	l	s	b	z	t	B	n		Dinamico C *Dynamic C*	Statico C_o *Static C_o*			
	mm/inch												mm/inch					kg
UCFL201	**12**	113	90	15	11	25,5	12	60	33,3	37,5	31	12,7	M10	12160	6318	**UC201**	**FL204**	0,45
UCFL201-8	¾	4 7/16	3 35/64	19/32	7/16	1	15/32	2⅜	1 5/16	1 31/64	1,2205	0,500	⅜			UC201-8		0,44
UCFL202	**15**	113	90	15	11	25,5	12	60	33,3	37,5	31	12,7	M10	12160	6318	**UC202**	**FL204**	0,44
UCFL202-9	9/16	4 7/16	3 35/64	19/32	7/16	1	15/32	2⅜	1 5/16	1 31/64	1,2205	0,500	⅜			UC202-9		0,44
UCFL202-10	⅝															UC202-10		0,44
UCFL203	**17**	113	90	15	11	25,5	12	60	33,3	37,5	31	12,7	M10	12160	6318	**UC203**	**FL204**	0,43
UCFL203-11	11/16	4 7/16	3 35/64	19/32	7/16	1	15/32	2⅜	1 5/16	1 31/64	1,2205	0,500	⅜			UC203-11		0,42
UCFL204	**20**	113	90	15	11	25,5	12	60	33,3	37,5	31	12,7	M10	12160	6318	**UC204**	**FL204**	0,41
UCFL204-12	¾	4 7/16	3 35/64	19/32	7/16	1	15/32	2⅜	1 5/16	1 31/64	1,2205	0,500	⅜			UC204-12		0,41
UCFL205	**25**	130	99	16	13	27	16	68	35,8	40	34,1	14,3	M14	13300	7457	**UC205**	**FL205**	0,58
UCFL205-13	13/16															UC205-13		0,62
UCFL205-14	⅞	5⅛	3 57/64	⅝	½	1 1/16	⅝	2 11/16	1 13/32	1 9/16	1,3425	0,563	½			UC205-14		0,61
UCFL205-15	15/16															UC205-15		0,59
UCFL205-16	1															UC205-16		0,58
UCFL206	**30**	148	117	18	13	31	16	80	40,2	44,5	38,1	15,9	M14	18525	10735	**UC206**	**FL206**	0,86
UCFL206-17	1 1/16															UC206-17		0,89
UCFL206-18	1⅛	5 13/16	4 39/64	45/64	½	1 7/32	⅝	3 5/32	1 19/32	1¾	1,5000	0,626	½			UC206-18		0,88
UCFL206-19	1 3/16															UC206-19		0,86
UCFL206-20	1¼															UC206-20		0,85
UCFL207	**35**	161	130	19	14	34	16	90	44,4	48,5	42,9	17,5	M14	24415	14630	**UC207**	**FL207**	1,08
UCFL207-20	1¼															UC207-20		1,14
UCFL207-21	1 5/16	6 11/32	5⅛	¾	35/64	1 13/32	⅝	3 35/64	1¾	1 29/32	1,6890	0,689	½			UC207-21		1,11
UCFL207-22	1⅜															UC207-22		1,08
UCFL207-23	1 7/16															UC207-23		1,05
UCFL208	**40**	175	144	21	14	36	16	100	51,2	55,5	49,2	19	M14	27645	16910	**UC208**	**FL208**	1,44
UCFL208-24	1½	6⅞	5 43/64	53/64	35/64	1 13/32	⅝	3 15/16	2 1/64	2 3/16	1,9370	0,748	½			UC208-24		1,48
UCFL208-25	1 9/16															UC208-25		1,45
UCFL209	**45**	188	148	22	15	38	19	108	52,2	56,5	49,2	19	M16	32395	20235	**UC209**	**FL209**	1,74
UCFL209-26	1⅝															UC209-26		1,84
UCFL209-27	1 11/16	7 13/32	5 53/64	55/64	19/32	1½	¾	4¼	2 1/16	2 7/32	1,9370	0,748	⅝			UC209-27		1,80
UCFL209-28	1¾															UC209-28		1,76
UCFL210	**50**	197	157	22	15	40	19	115	54,6	59,5	51,6	19	M16	33345	22135	**UC210**	**FL210**	2,10
UCFL210-29	1 13/16															UC210-29		2,22
UCFL210-30	1⅞	7¾	6 3/16	55/64	19/32	1 37/64	¾	4 17/32	2 5/32	2 11/32	2,0315	0,748	⅝			UC210-30		2,17
UCFL210-31	1 15/16															UC210-31		2,12
UCFL210-32	2															UC210-32		2,08
UCFL211	**55**	224	184	25	18	43	19	130	58,4	63	55,6	22,2	M16	41230	27930	**UC211**	**FL211**	2,91
UCFL211-32	2															UC211-32		3,06
UCFL211-33	2 1/16	8 13/16	7¼	63/64	23/32	1 11/16	¾	5⅙	2 5/16	2 15/32	2,1890	0,874	⅝			UC211-33		3,00
UCFL211-34	2⅛															UC211-34		2,95
UCFL211-35	2 3/16															UC211-35		2,89
UCFL212	**60**	250	202	29	18	48	23	140	68,7	73,5	65,1	25,4	M20	49780	34390	**UC212**	**FL212**	3,74
UCFL212-36	2¼															UC212-36		3,87
UCFL212-37	2 5/16	9 27/32	7 61/64	1 9/64	23/32	1⅞	29/32	5½	2 23/32	2 57/64	2,5630	1,000	¾			UC212-37		3,79
UCFL212-38	2⅜															UC212-38		3,72
UCFL212-39	2 7/16															UC212-39		3,65
UCFL213	**65**	258	210	30	22	50	23	155	69,7	74,5	65,1	25,4	M20	54340	38095	**UC213**	**FL213**	4,57
UCFL213-40	2½	10 5/32	8 17/64	1 3/16	⅞	1 31/32	29/32	6 3/32	2¾	2 15/16	2,5630	1,000	¾			UC213-40		4,66
UCFL213-41	2 9/16															UC213-41		4,57
UCFL214	**70**	265	216	31	22	54	23	160	75,4	-	74,6	30,2	M20	59090	41895	**UC214**	**FL214**	5,11
UCFL214-42	2⅝															UC214-42		5,32
UCFL214-43	2 11/16	10 7/16	8½	1 7/32	⅞	2⅛	29/32	6 5/16	2 31/32	-	2,9370	1,189	¾			UC214-43		5,22
UCFL214-44	2¾															UC214-44		5,12
UCFL215	**75**	275	225	34	22	56	23	165	78,5	-	77,8	33,3	M20	64030	45885	**UC215**	**FL215**	5,37
UCFL215-45	2 13/16															UC215-45		5,62
UCFL215-46	2⅞	10 13/16	8 55/64	1 11/32	⅞	2 7/32	29/32	6½	3 3/32	-	3,0630	1,311	¾			UC215-46		5,51
UCFL215-47	2 15/16															UC215-47		5,40
UCFL215-48	3															UC215-48		5,28
UCFL216	**80**	290	233	34	22	58	25	180	83,3	-	82,6	33,3	M22	69065	50350	**UC216**	**FL216**	7,20
UCFL216-49	3 1/16															UC216-49		7,38
UCFL216-50	3⅛	11 13/32	9 11/64	1 11/32	⅞	2 9/32	63/64	7 3/32	3 9/32	-	3,2520	1,311	⅞			UC216-50		7,25
UCFL216-51	3 1/16															UC216-51		7,12
UCFL217	**85**	305	248	36	24	63	25	190	87,6	-	85,7	34,1	M22	79800	58805	**UC217**	**FL217**	8,61
UCFL217-52	3¼															UC217-52		8,83
UCFL217-53	3 5/16	12	9 49/64	1 27/64	15/16	2 15/32	63/64	7 15/32	3 7/16	-	3,3740	1,343	⅞			UC217-53		8,69
UCFL217-55	3 7/16															UC217-55		8,40
UCFL218	**90**	320	265	40	24	68	25	205	96,3	-	96	39,7	M22	91295	67925	**UC218**	**FL218**	10,51
UCFL218-56	3½	12 19/32	10 7/16	1 37/64	15/16	2 11/16	63/64	8 1/16	3 25/32	-	3,7795	1,5630	⅞			UC218-56		10,62

Disponibile in acciaio inox Supporto: AISI 304 - Cuscinetto: AISI 440C o 420C - *Available stainless steel Housing: AISI 304 - Bearing: AISI 440C or 420C*
Disponibile su richiesta con cuscinetto SA (SAFL) - *Available under request with SA bearing (SAFL)*